Test and First Application of Sapphire Sensors

Alexandr Ignatenko

3rd ADAMAS Collaboration Meeting
Trento, Italy, November 20, 2014

Overview

- Introduction
- Sapphire sensors studies
- Application for the Beam Halo Monitor (BHM) at FLASH
- BHM for the European XFEL
- Summary

Introduction

Synthetic sapphire is an interesting sensor material

Commercially available

Low initial CCE values → Idea to improve the CCE by decreasing the impurity level or proper growth method

First application of sapphire sensors for the BHM at FLASH

Successful operation of the BHM at FLASH → BHM for the European XFEL

Sapphire sensors studies

Relevant sensor material properties

Material property	Silicon	Diamond	Sapphire
Density, g/cm^3	2.32	3.52	3.98
Band gap, eV	1.12	5.45	8.8
Electron-hole pair creation energy, eV	3.62	13.2	24.6
Electron mobility, cm^{2}V^{-1}s^{-1}	1350	1800-4500	~ 600
Hole mobility, cm^{2}V^{-1}s^{-1}	480	1200-3800	n/a

- Wide band gap → no need for depletion
- Large electron-hole pair creation energy → smaller signal
- High radiation tolerance
- Fast signals

Single crystal sapphire wafer

Sapphire sensors

Single crystal sapphire (Al_2O_3) with different impurity concentration from different manufacturers

1. CRYSTAL GmbH

   grown by Czochralski method, impurity level 33-39 ppm

2. RSA Le Rubis

   grown by Kyropolous method, impurity level 40 ppm

3. Kyocera

   grown by EFG method, impurity level 60 ppm

Cut [0001], dimensions 10×10×0.5 mm^3

Metallization by Target laboratory @ GSI: 1 pad 8×8 mm^2 from each side

1 Al layer 200 nm thick or Al/Ti/Au layers respectively 50/50/200 nm

Sapphire sensors laboratory tests

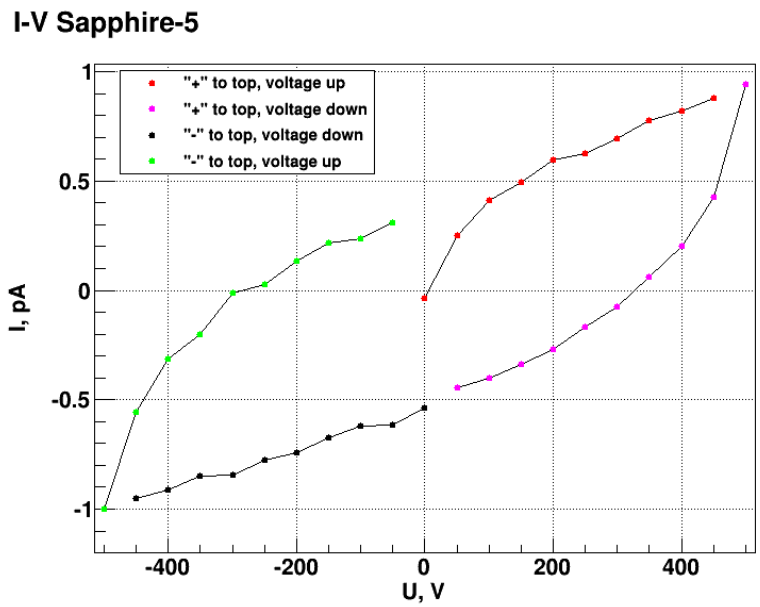

I-V characteristic

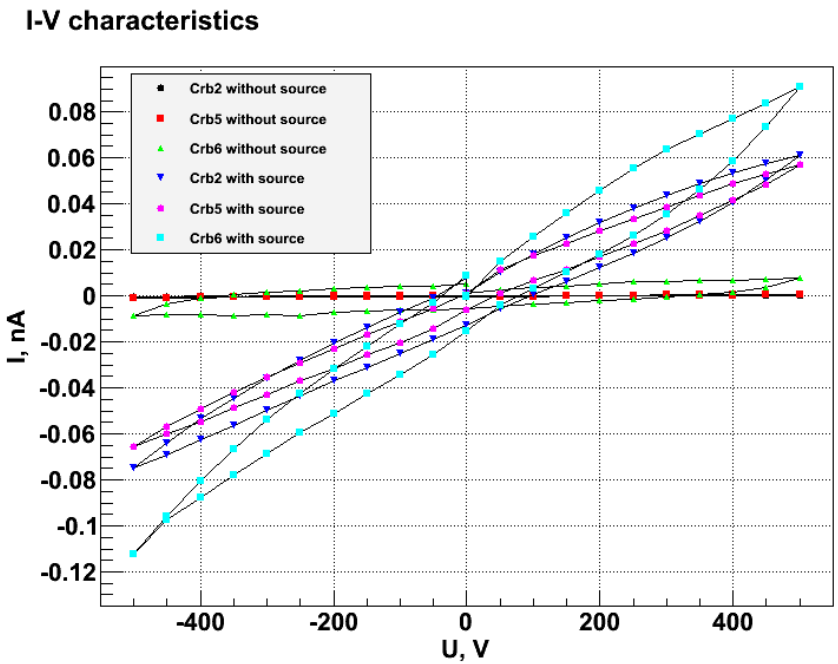

Signal as a response to a single MIP is too low for detection

Signal as a response to particle flux from ^{90}Sr source

Irradiation studies

Irradiation setup

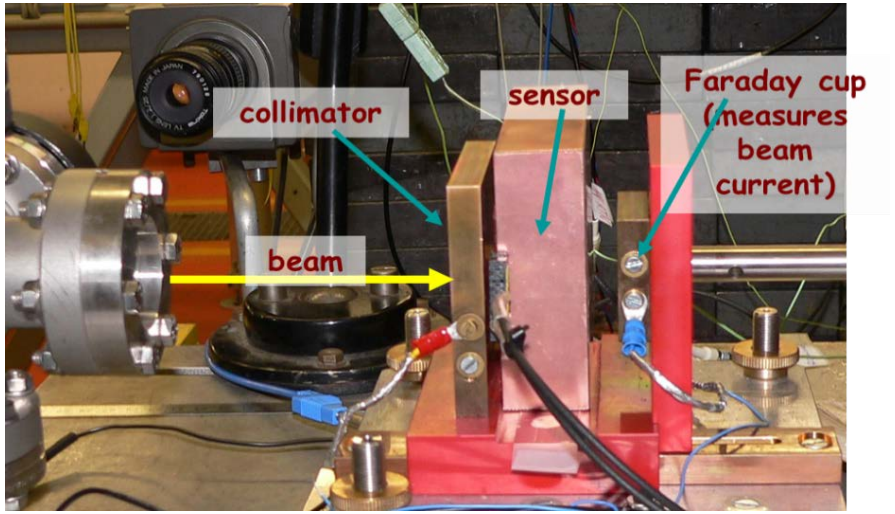

8.5 MeV electron beam

@ S-DALINAC

Relative efficiency as a function of dose

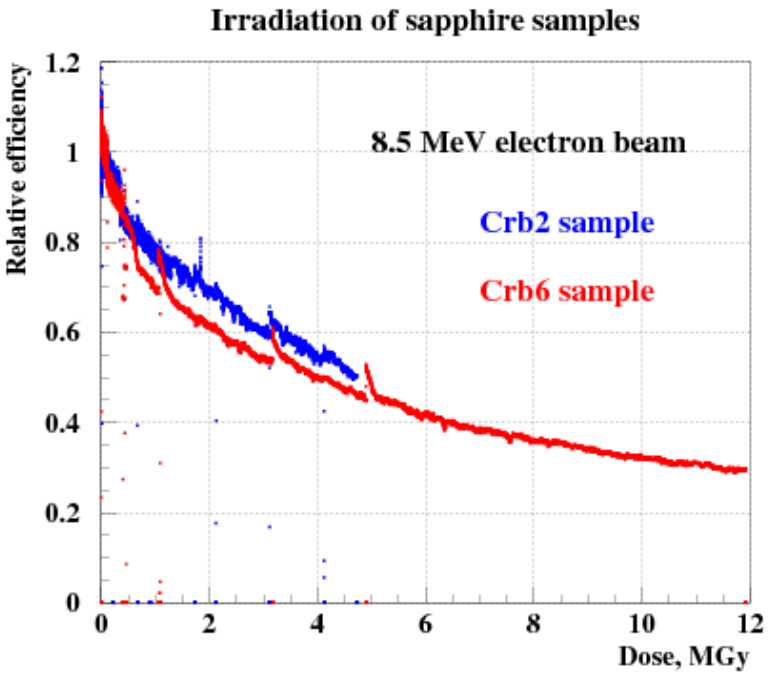

30 % of the initial value of the signal after 12 MGy

CCE of sapphire sensors

CRYSTAL

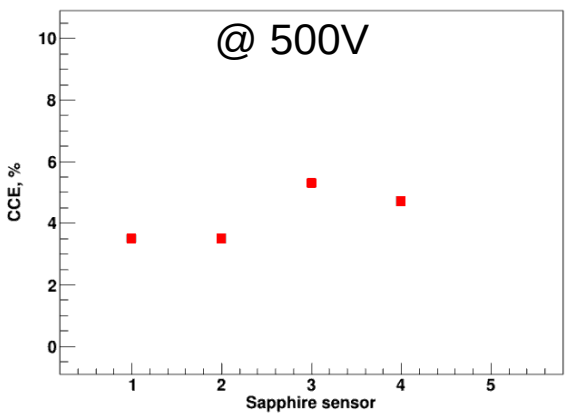

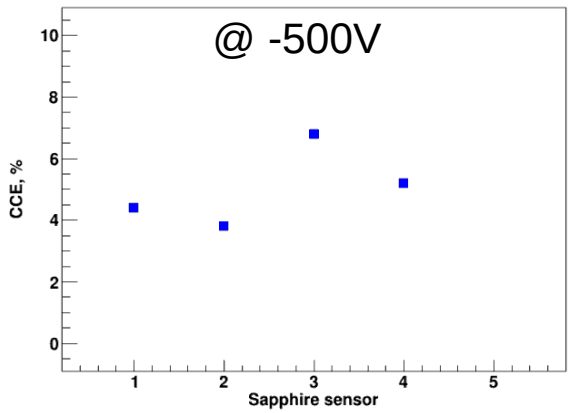

Bias voltage ramp up/down
0V -> 500V -> 0V -> -500V -> 0V

The sensors are pumped during the measurement (@ -500 V)

CCE in the pumped state is up to 50-100 % higher than that in the unpumped state

RSA Le Rubis

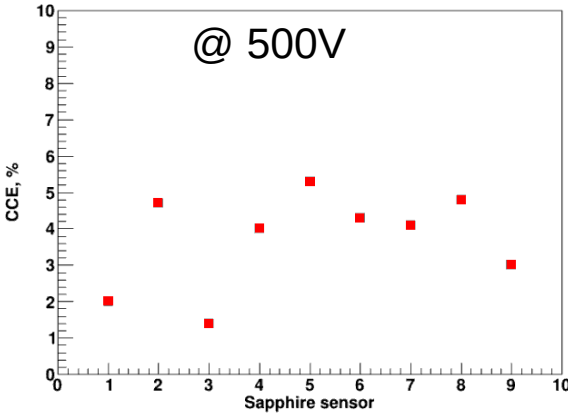

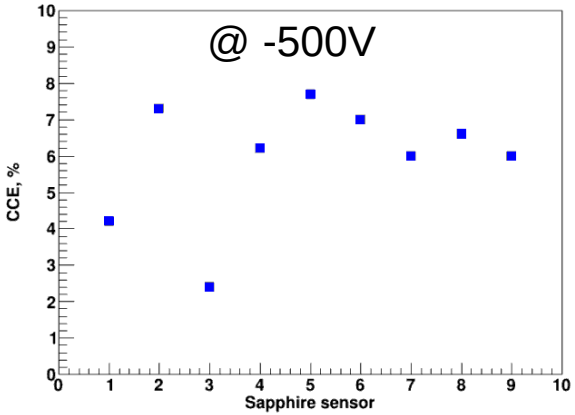

No strong dependency on the impurity concentration

Reaching high purity can be expensive

An alternative is to apply these sensors in specific applications or to use assemblies of such sensors with dedicated design

Kyocera No signal observed

Application for the Beam Halo Monitor (BHM) at FLASH

FLASH facility

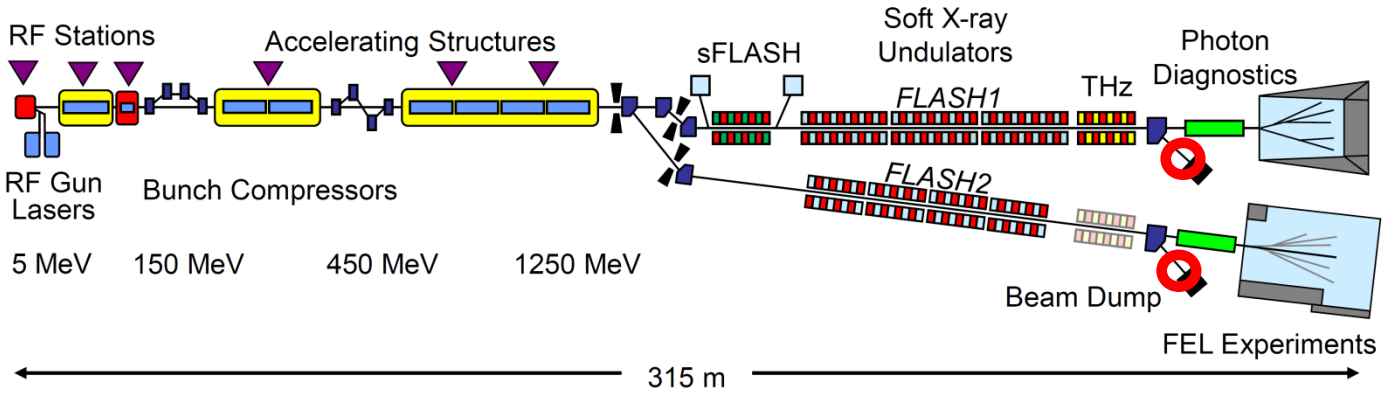

Charge	0.2 – 1.2 nC
Energy	450 – 1250 MeV
Photon wavelength	4.1 – 40 nm
Bunch frequency	0.1 – 1 (3) MHz
Macro-pulse frequency	10 Hz
Macro-pulse length	≤ 800 µs
Max. average beam power	100 kW

FLASH is the world's first soft X-ray free-electron laser available to the photon science user community for experiments since 2005. This is a user facility of the SASE FEL beam at DESY and also a test facility for the European XFEL and the ILC

FLASH electron beam dump line

Beam accident during the “9 mA” run

Additional instrumentation was needed

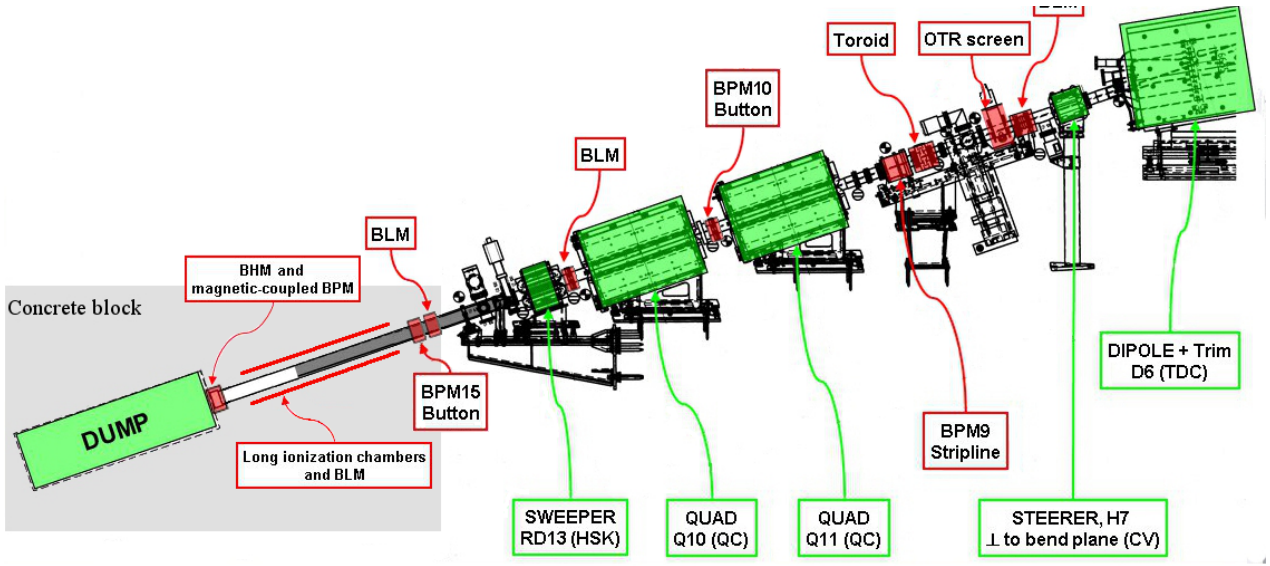

FLASH
dump section

The BHM is intended to detect beam displacements by registering the halo particles

Part of the electron beam dump diagnostics

BHM at FLASH

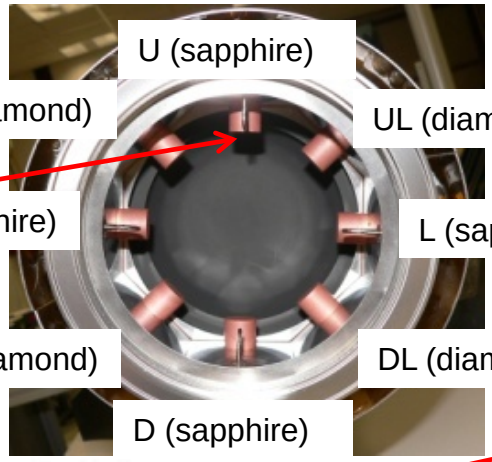

BHM module carrying 4 pCVD diamonds and 4 synthetic sapphires

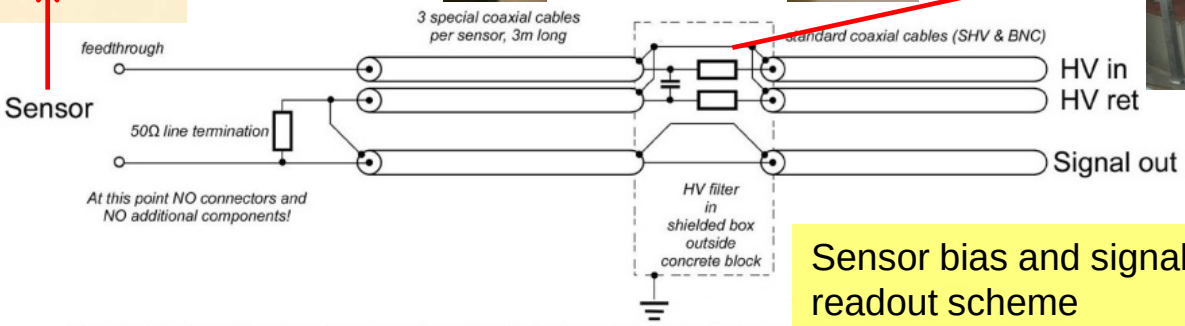

Sensor bias and signal readout scheme

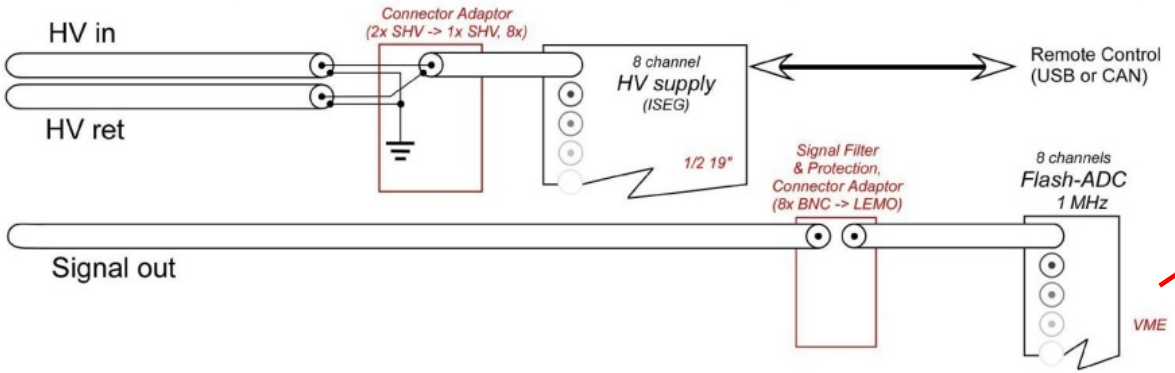

Operation experience

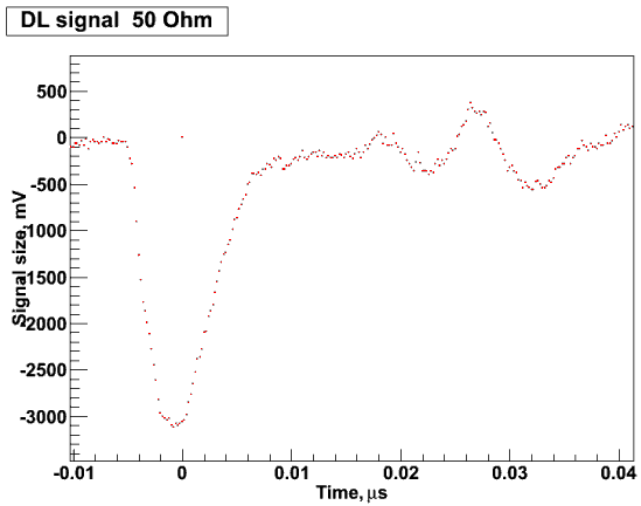

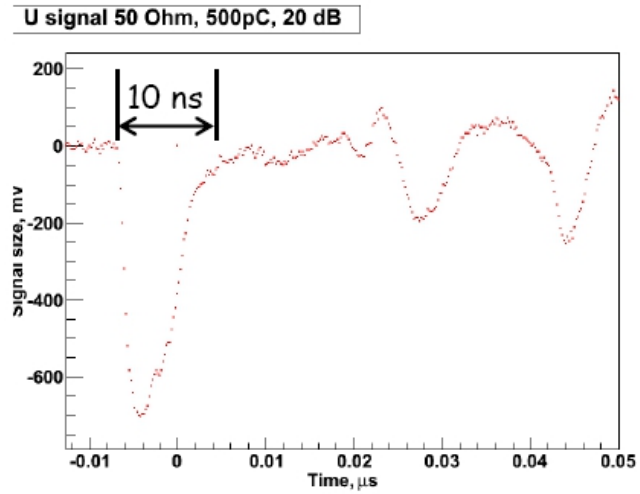

Analog signals from a diamond (left) and a sapphire (right) sensors as a response to 1 bunch

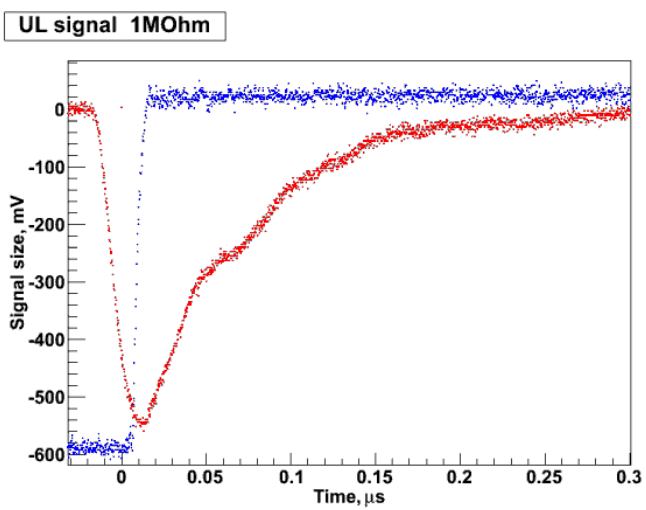

Shaped analog signal from a BHM sensor

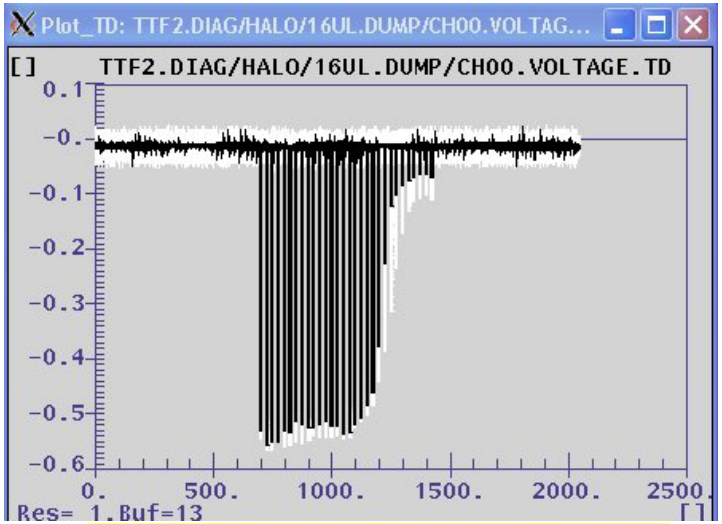

Digitized signals for 30 bunches

Response to small beam displacements

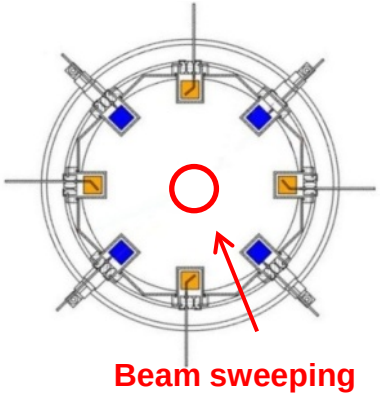

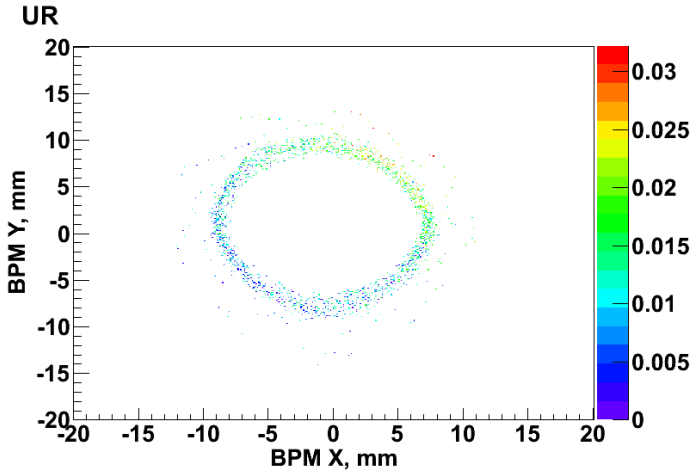

Signal (in V) from a diamond sensor as a function of beam position

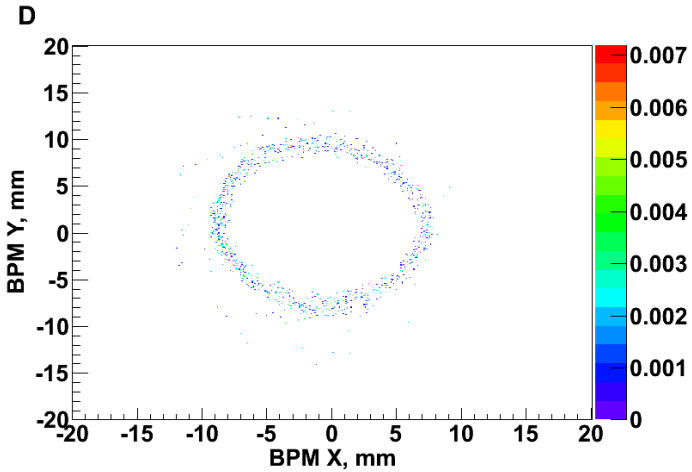

Signal (in V) from a sapphire sensor as a function of beam position

Sweeping frequency 1.1 Hz

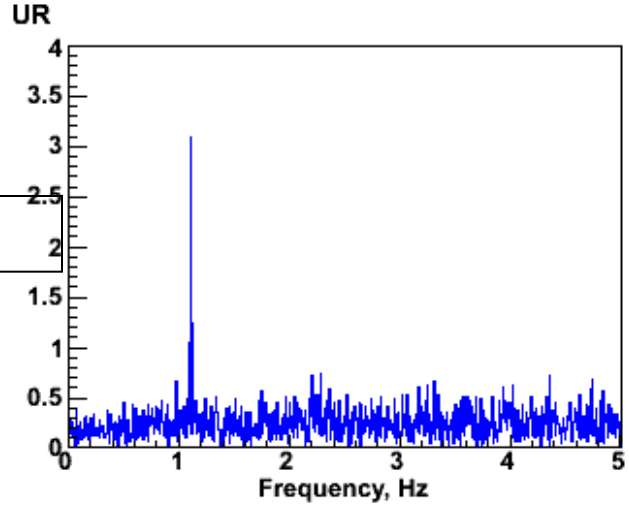

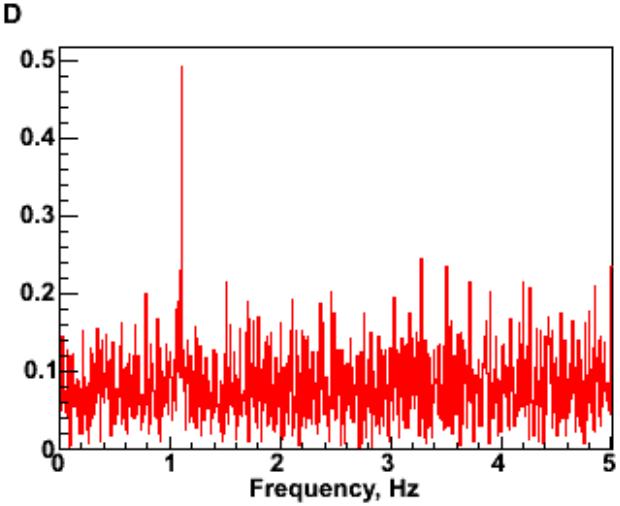

The signals in the frequency domain

Calibration

The idea is to determine relationship between the signal from a sensor and the charge of the particles hitting the sensor

Energy 943 MeV
1 bunch per train (40 pC to 1 nC)
No defocusing in the dump section
Beam centered (as good as possible) in the dump section
Sweeper on, radius of 55 mm (beam pipe center – sensor center distance)

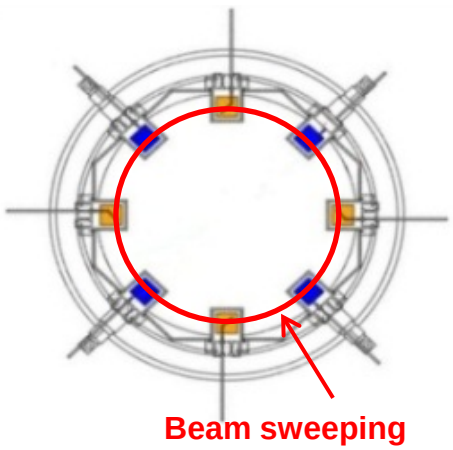

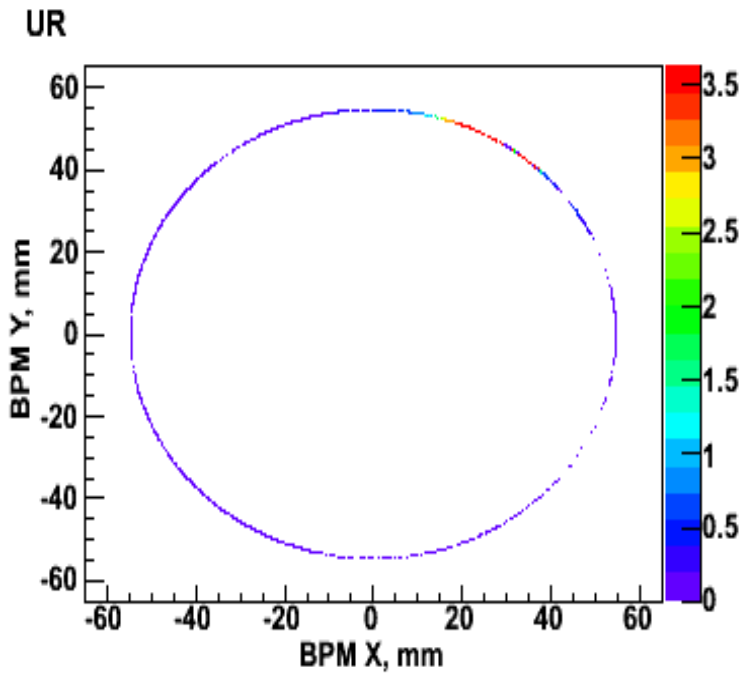

Signal from a BHM sensor (in V) as a function of beam position

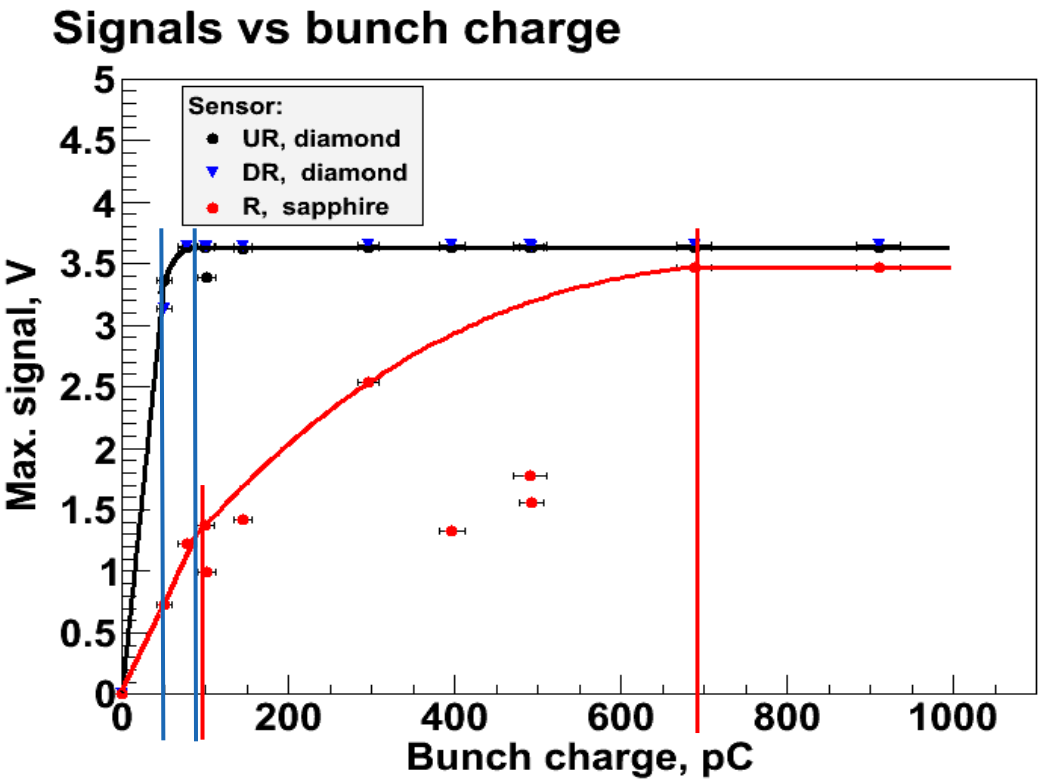

Fits for a diamond and a sapphire
3 ranges: linear, nonlinear, saturation

Some points are excluded from the fit as the values are considered to be wrong

Bunch charge = F^{-1}(Signal)

Under normal conditions the sensors operate in the linear range. Sapphire sensors are capable to detect further worsening of the conditions thus increasing dynamic range of the BHM

BHM for the European XFEL

European XFEL

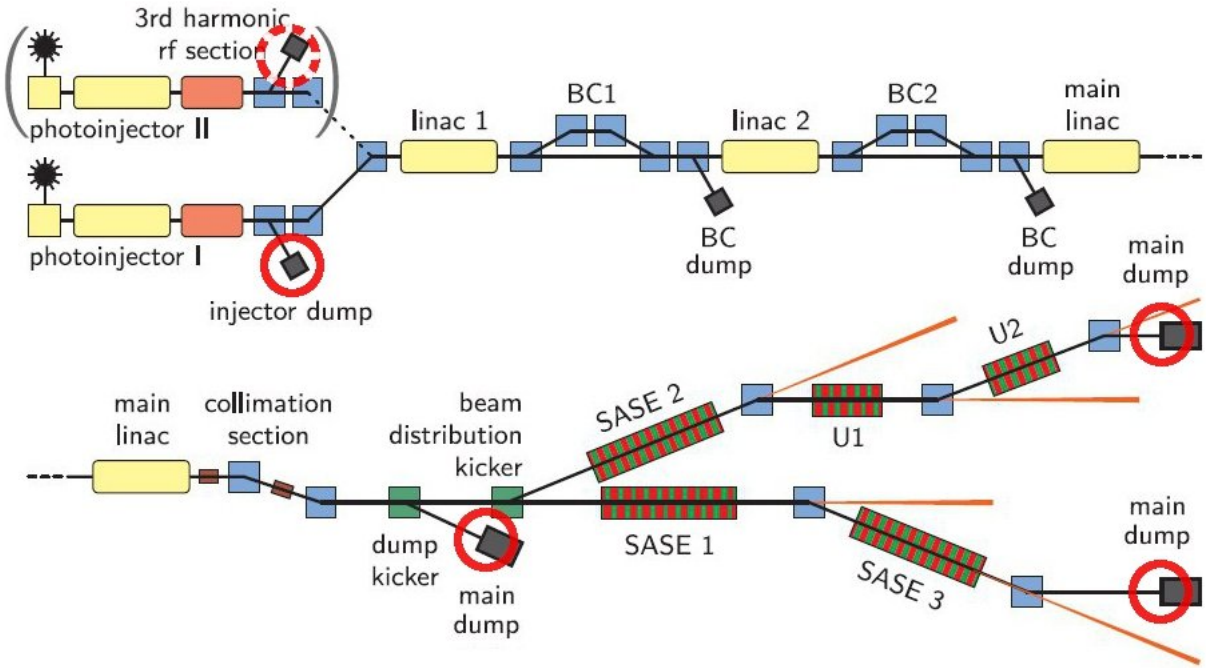

Charge	0.02 – 1 nC
Energy	Up to 17.5 GeV
Bunch frequency	Up to 4.5 MHz
Macro-pulse frequency	10 Hz
Macro-pulse length	≤ 600 µs
Max. average beam power	300 kW

European X-Ray Free-Electron Laser (XFEL) is a new international facility to generate extremely brilliant, ultra-short pulses of spatially coherent X-rays and to exploit them for experiments in a variety of disciplines

BHM at the European XFEL

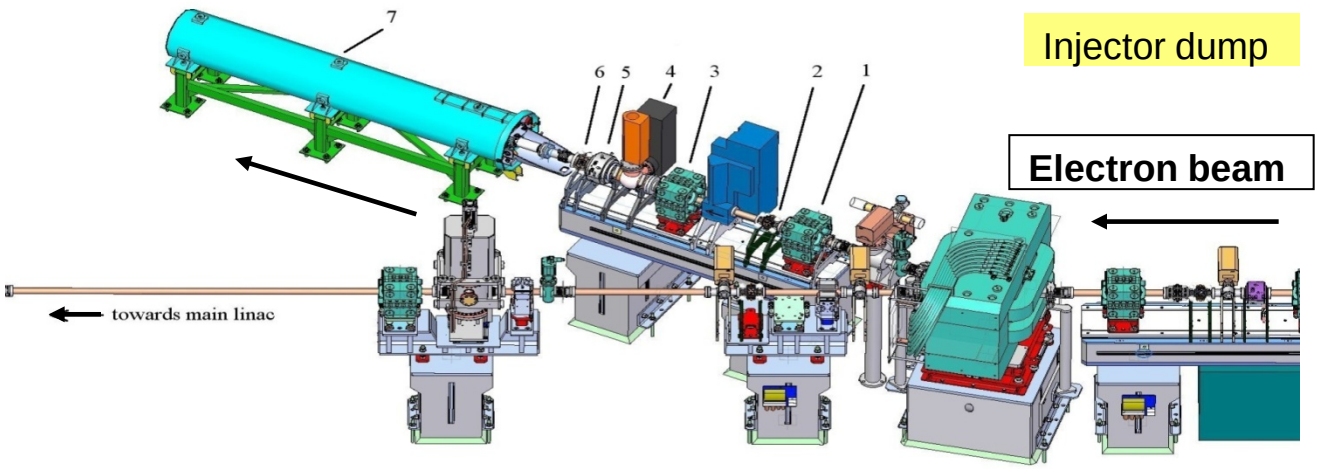

1,3 – quadruple magnets
2, 6 – BPM
4 – OTR screen
5 – toroid
7 – the last section with absorber

1, 3 and 7 – BPMs
2 – dipole steerer magnets
4 – OTR screen
5 – toroid
6 – BHM
8 – position of ionization chambers and BLMs

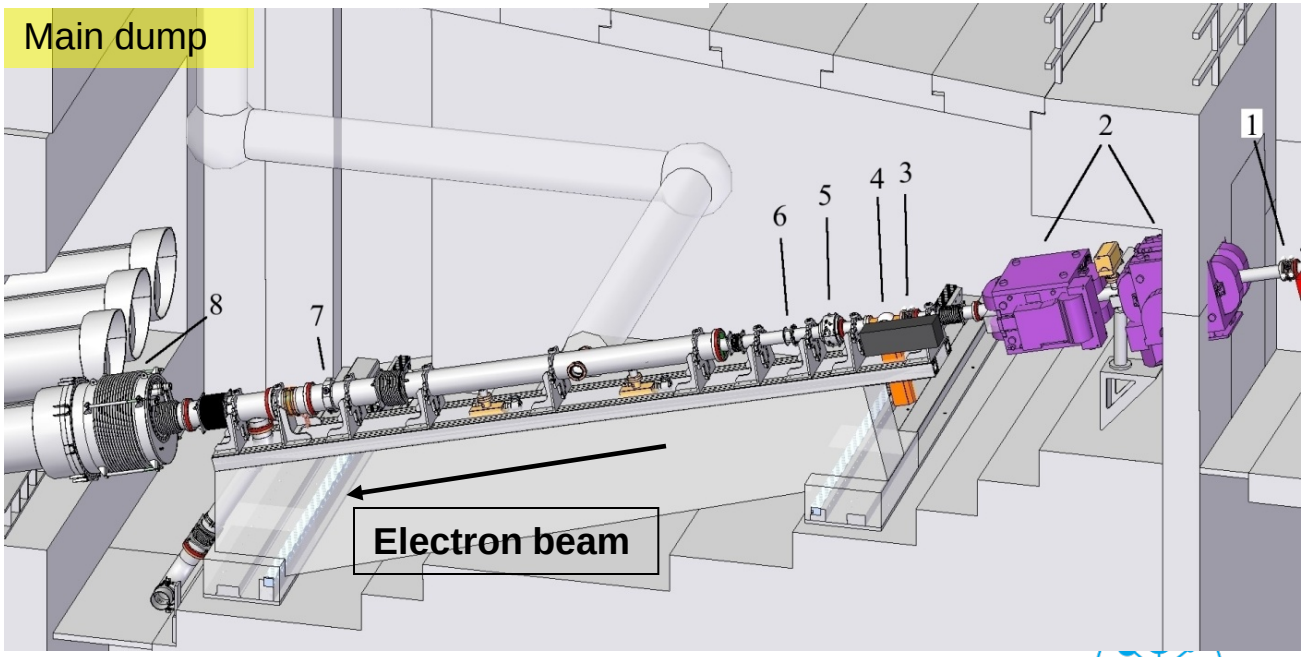

BHM at the European XFEL

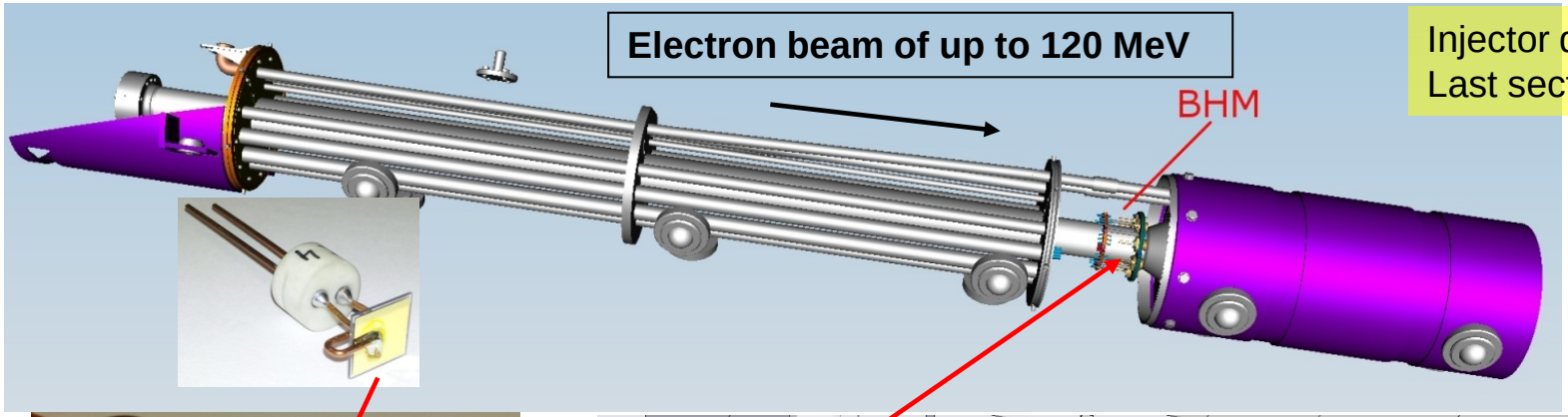

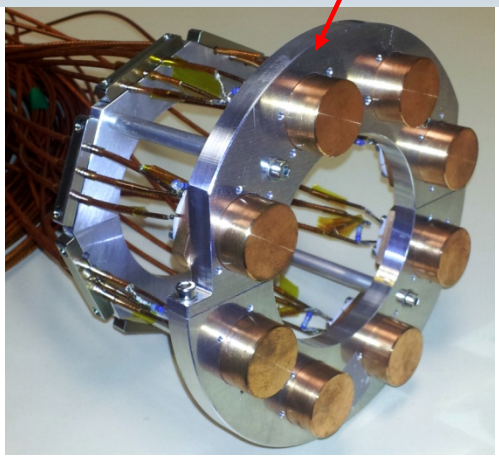

BHM module for the E-XFEL

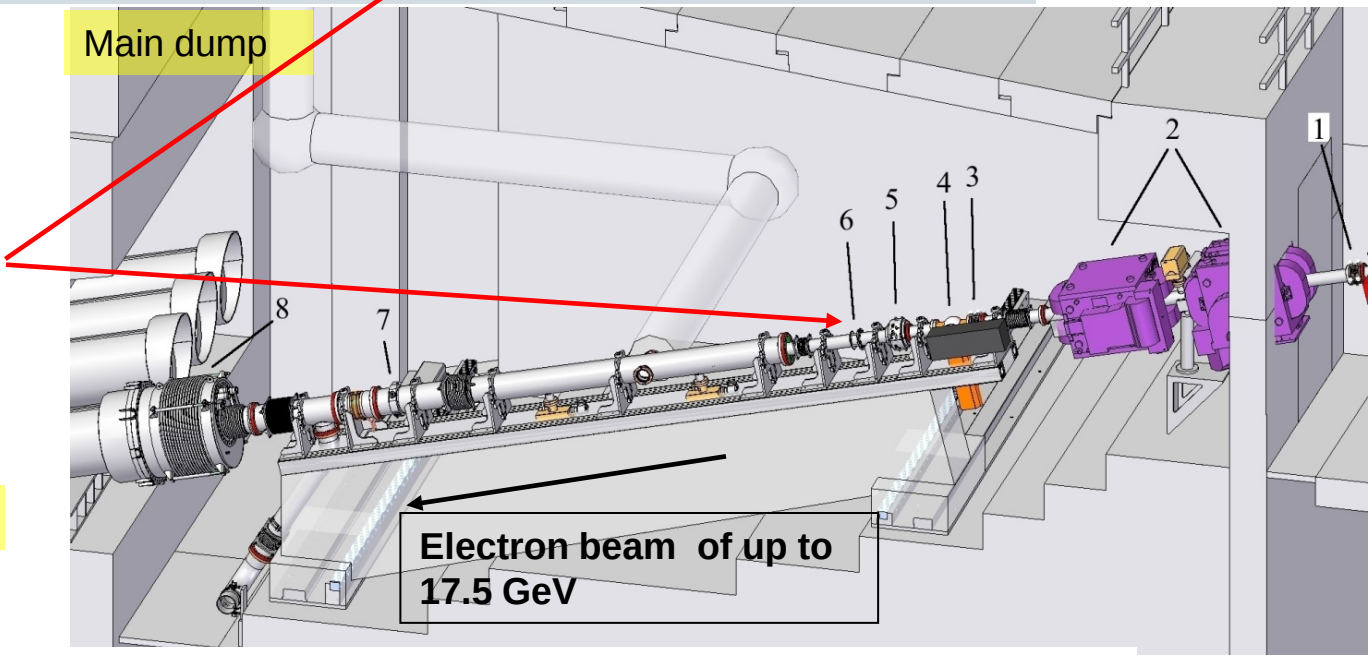

Intended to detect beam displacements by registering the secondaries along with primary halo particles

Each BHM module will provide alarm signals to MPS

Summary

- Synthetic sapphire is proven to be robust sensor material for application in high radiation fields up to several MGy and at high dose rates

- To fully exploit their potential detailed studies are needed

- Sapphire sensors were applied along with diamond sensors for the BHM, which has been designed, built, successfully commissioned and reliably operated at FLASH since Sept. 2009

- The BHM at FLASH is considered as prototype of the BHMs designed for the European XFEL

Thank you for your attention!

Contributors:

Hans Henschel
Wolfgang Lange
Wolfgang Lohmann
Sergej Schuwalow

Nicoleta Baboi
Olaf Hensler
Dirk Nölle
Michael Schmitz
Kay Wittenburg